HUJI, May 12th 2021
DE200600151

IMC-200 ION IMPLANTER

IMC 200 (200keV - 6" handling robot)

TABLE OF CONTENTS

Introduction **3**

1. General specifications **4**
- 1.1 Dose performances 4
- 1.2 Vacuum specifications (standard chamber) 4
- 1.3 Metallic contamination (standard chamber) 4
- 1.4 Beam currents 5

2. Hardware features **6**
- 2.1 System description 6
- 2.2 Customizable end station 8
- 2.3 Available species 9
- 2.4 Species delivery 10

3. User Interface **12**

4. Equipment hardware details **13**
- 4.1 Beam line 13
- 4.2 Vacuum 14
- 4.3 Dose measurement 14
- 4.4 X-Y Electrostatic Scanning 14
- 4.5 System Facilities 15
- 4.6 Electronics – Electrical 16
- 4.7 Monitoring electronics 17
- 4.8 CE marking 17

5. Software **18**
- 5.1 Operations 18
- 5.2 Safety management 18
- 5.3 Data logging 18
- 5.4 Screen examples 19

6. Options **21**
- 6.1 Energy 21
- 6.2 Species delivery 21
- 6.3 Software 22
- 6.4 wafer handling 22
- 6.5 Spare parts kit 24

7. Related services **25**
- 7.1 Warranties 25
- 7.2 Training 25
- 7.3 Documentation 25
- 7.4 Delivery and installation 25

8. Acceptance Procedures **26**
- 8.1 Factory acceptance tests 26
- 8.2 Final acceptance tests 26

9. Pricing **27**

INTRODUCTION

For the past 30 years, IBS has been innovating in the field of ion implantation, focusing its competencies towards providing unique and dedicated solutions for customers that cannot find a proper answer within the standard OEM products.

Following this idea, IBS has developed a unique and versatile medium current ion implanter. This equipment, able to handle standard ion implantations production tasks in automatic mode, can be customized to fulfil specific or uncommon operations and behaviors for research or non-standard operations purposes.

The machine proposed in this document is designed to fulfil the mandatory requirements which are listed below:

- High accuracy controllable ion beam & acceleration voltage
- CE marked
- Maximum safety
- Small footprint
- High reliability
- Low running costs
- Self-supporting maintenance
- Simple and “user friendly” manual operations
- High versatility aimed towards R&D applications

The pictures in the document are not contractual and may be different from actual realization.

1. GENERAL SPECIFICATIONS

- Implantation of N, O, and others such as C, Si, Ge, Sn
- up to 150 mm wafers, and down to 1 cm^2 samples capability

- Wafer substrates: mainly diamond

- Radiations emissions below 0.5 µSv/h at 10 cm from any point of external shielding

- CE marking

1.1 DOSE PERFORMANCES

- Implantation angle depends on carrousel configuration, standard is 7°
- Dose range: from 10^{11} at/cm^2 to 10^{18} at/cm^2
  - Normal use is 10^{11} at/cm^2 to 10^{16} at/cm^2
- Wafer non-uniformity (6''): $1\sigma \leq 1$ % at 7° tilt
  - Using IBS standard recipe: 150mm silicon wafer with 1000 Å oxide, ^{11}B, 100 keV, $1x10^{14}$ at/cm^2
- Wafer to wafer non-uniformity: $1\sigma \leq 1$ %
  - Using IBS standard recipe: 150mm silicon wafer with 1000 Å oxide, ^{11}B, 100 keV, $1x10^{14}$ at/cm^2

1.2 VACUUM SPECIFICATIONS (STANDARD CHAMBER)

- Idle pressure (after 7 hours pumping w/o implantation)
  - Source : $< 2x10^{-6}$ mbar
  - Beam line : $< 7x10^{-7}$ mbar
  - End station : $< 7x10^{-7}$ mbar

1.3 METALLIC CONTAMINATION (STANDARD CHAMBER)

- $5x10^{10}$ at/cm^2 for all metals
- $5x10^{12}$ at/cm^2 for Aluminium
  - Silicon wafer, Ar, 80 keV, $5x10^{14}$ at/cm^2

1.4 BEAM CURRENTS

- Maximum total unscanned beam current: 3000 µA

- Maximum scanned beam current (6” wafer, eµA)

	Species		
	Enriched ^{11}B, ^{40}Ar	^{31}P	^{75}As
	Current (eµA)		
Energy (keV)	*Single charge*		
30 – 50	300	350	350
50 – 70	400	750	750
70 – 90	500	1 000	1 000
90 – 120	500	1 250	1 250
120 – 200	600	1 500	1 500
	Double charge		
> 200 – 400	> 10	> 50	> 50

2. HARDWARE FEATURES

2.1 SYSTEM DESCRIPTION

The IMC has been designed on medium current ion implanter base. The tool is divided in 3 modules as shown in the pictures hereunder:

Terminal	including power, ion source, gas box and beam analyser
Beam Line	including beam optics, scanners and main control
End Station	including implant chamber and handling system

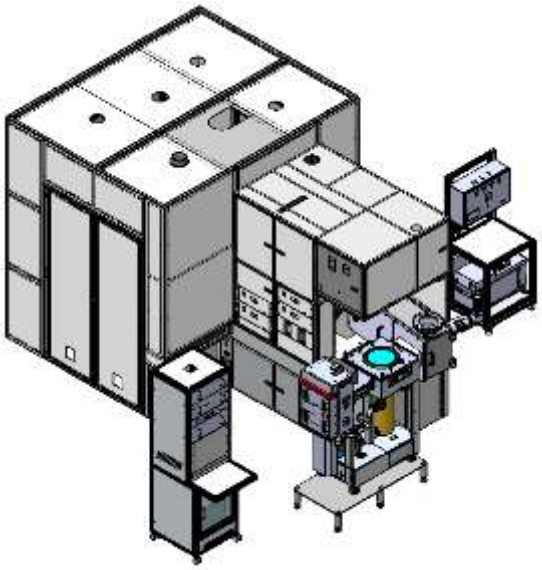

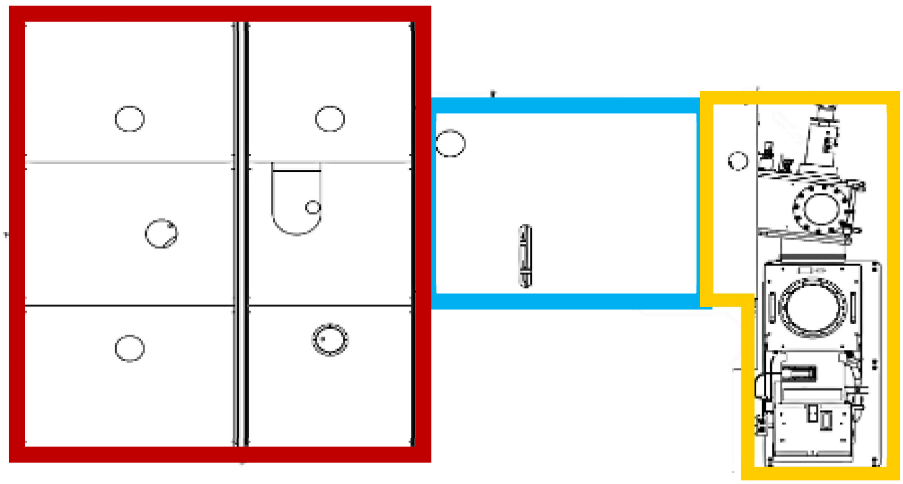

Terminal in red - Beam Line in blue - End Station in yellow (with optional robot)

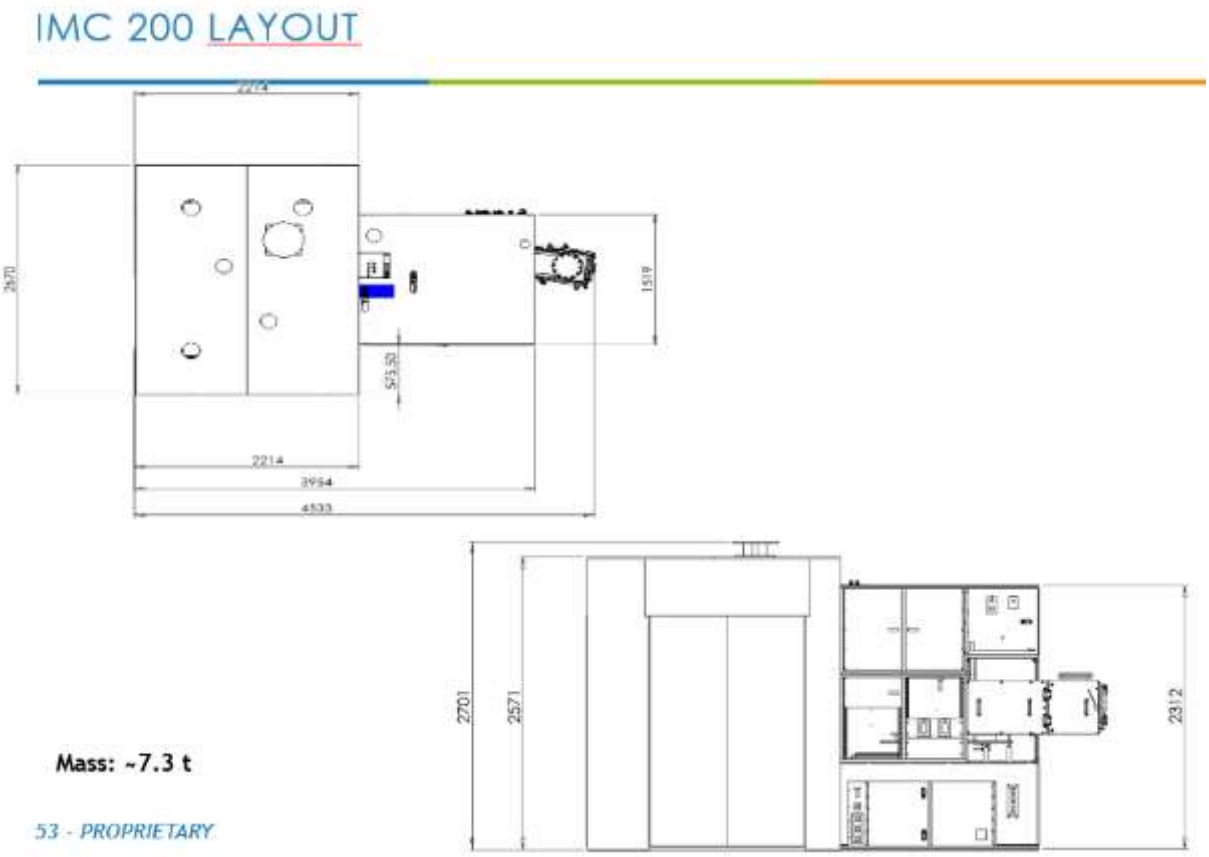

IMC200 layout

2.2 CUSTOMIZABLE END STATION

2.2.1 UNIVERSAL IMPLANT CHAMBER

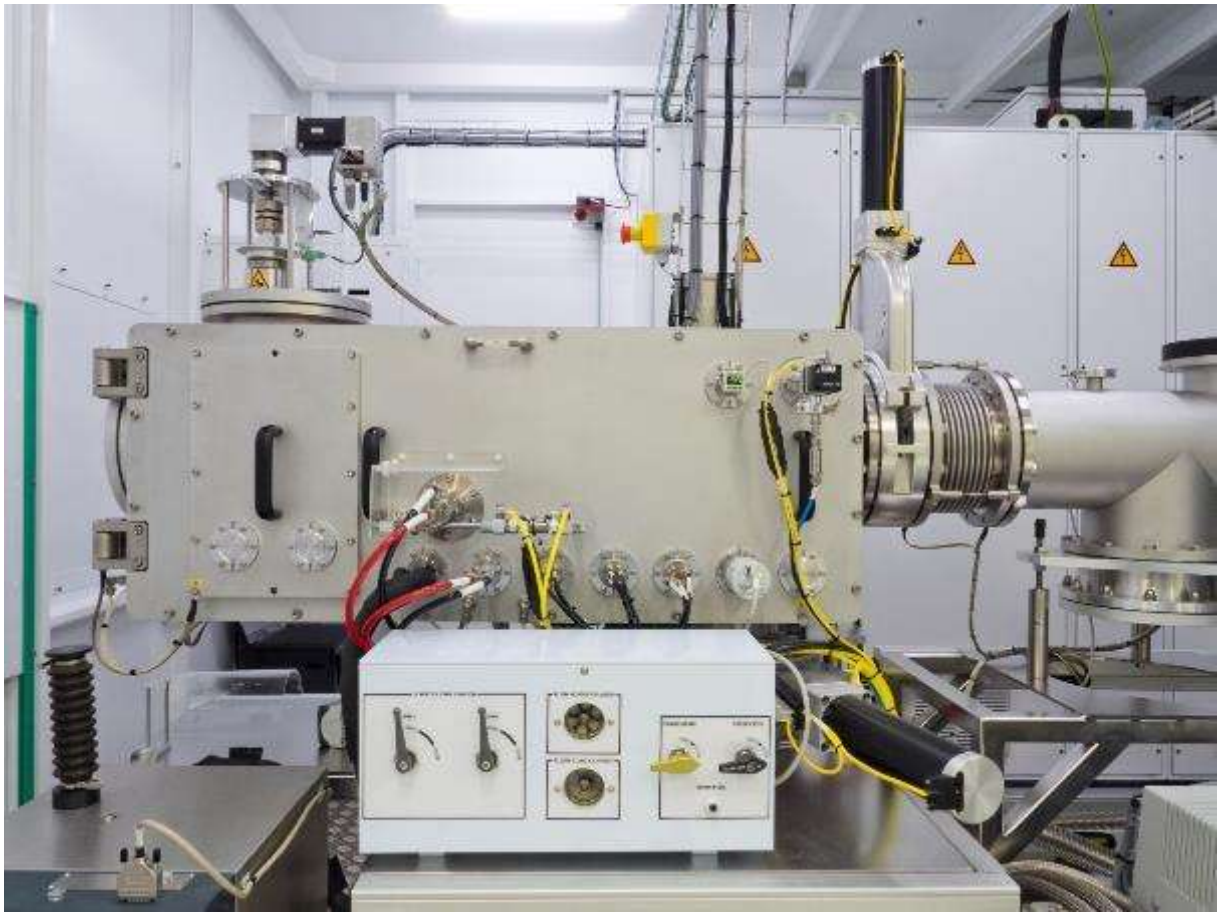

Universal process chamber

The system is equipped with a single wafer process chamber, designed to accept all the different platens technologies available in IBS catalog (multi-wafer, hot or cold single wafer, electrostatic …)
This chamber is also compatible with all the handling systems available, and can be retrofitted from one to the other (manual to automatic).

Universal process chamber

2.2.2 CAROUSEL

The chamber is fitted with a cube shaped carrousel that accepts up to 4 wafers (one per face).
The wafers are processed one after the other during the same vacuum cycle. When the chamber is vented, wafers are manually loaded or unloaded.
The carrousel can be loaded with wafers 2”, 3”, 4”, 5”, 6”, 8” in option by simple adjustment of hard-stops and knobs.
The tilt is fixed for the whole carrousel. The carrousel is easily replaceable by another one with different tilt characteristics (from 0° to 14° tilt). The standard carrousel has a 7° tilt configuration.
In option the wafers can be rotated clockwise from 0° to 30°.
The wafers are cooled either by DI water, or by chiller (chiller limited to 0°C on the carrousel, for mechanical reason).
The temperature of the carousel is measured by 4 TC, and in option by a pyrometer which measure the actual wafer temperature.

The carousel system can be fitted with an optional chiller that provides additional cooling to the substrates during implant. This helps controlling the wafer temperature and prevent overheating

2.3 AVAILABLE SPECIES

Over 60 species available for implantation through the use of various standard ion sources or optional delivery systems:

Species already implanted at IBS facility and available on request

2.4 SPECIES DELIVERY

2.4.1 DIRECT HOT CATHODE ION SOURCE

A set of 2 direct hot cathode ion sources are delivered with the system. Several options (sputter, vaporizer) can be proposed (cf. options section).

2.4.2 GAS SPECIES DELIVERY

The standard gas panel has the capability to distribute independently up to 3 different species (either toxic or neutral species).

It is fully automated and operated via the equipment's software, with the ability to monitor and track gas consumptions, as well as detecting the gas bottle endpoint (IMT® technology).

The gas delivery can be configured and manufactured to operate with high pressure gas bottles, as well as Uptime® or SDS® low pressure technologies, depending on customer's requirements. The size of the bottles is 0.5L (LBX cylinder or equivalent).

The 4th slot can be configured either for the use of an *inert* gas (HP technology) or to connect a special optional line, such as the auxiliary gas box allowing the delivery of up to 4 additional *inert* gases. By default, this line is configured to connect to the customer's bulk neutral gas delivery system at a pressure of 30 PSI max.

Note: The gas delivery system is only compatible with Praxair Uptime®, Matheson SDS2® or high-pressure gas delivery technologies.

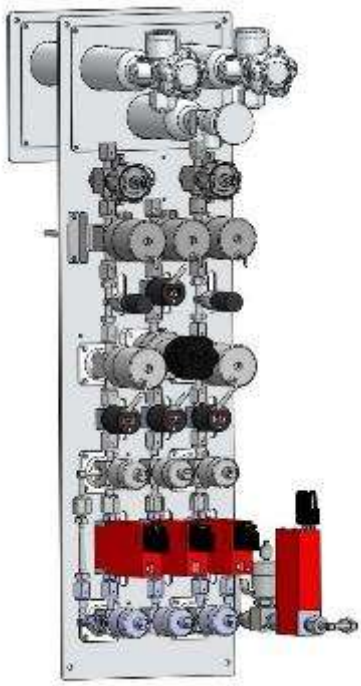

3. USER INTERFACE

The tool is equipped with a remote tower holding a touch screen monitor, as well as all other necessary displays and interaction devices.

This remote tower operates among other things beam set-up and monitoring (oscilloscope), data back-up, printing…

touch screen monitor

4. EQUIPMENT HARDWARE DETAILS

4.1 BEAM LINE

4.1.1 MAGNET ANALYZER

The analyzer magnet is of type 90° magnetic sector.
Ion mass range: 4.3 MeV.AMU
Resolution M/ΔM: 100.
It is specifically designed to lower the beam loss.

4.1.2 VARIABLE BEAM SLIT

It blocks the ion beam, thus allowing the regulation of the beam current via a graphite variable slit located at the focus point of the analyzer magnet.

4.1.3 ACCELERATION COLUMN

The acceleration column is constituted of a succession of electro polished aluminium electrodes providing a uniform gradient of ion acceleration.
It is powered by a 180 kV power supply combined with a 30 kV extraction power supply allows an implantation energy up to 200 keV.

4.1.4 FOCUS ASSEMBLY

Following the acceleration column, the quadrupole assembly optimizes the ion beam focus for the full range of available implantation energy.
It is constituted of an assembly of 2 sets of four lenses connected to graphite input and output electrodes.

4.2 VACUUM

4.2.1 PUMPING SYSTEM

Standard configuration:

- Source area:
  - 1 roughing dry pump chemical 100 m^3/h
  - 1 turbomolecular pump (1200 l/s)
- Beam line/End station:
  - 1 roughing dry pump 100 m^3/h
  - 2 cryogenic pumps with one compressor

4.2.2 VALVES AND ISOLATION

Each element under vacuum (chambers, beam line, source) and pumping device are isolated by state of art, gate valves, vent valves, and roughing vacuum valves in order to ease maintenance operations or vacuum troubleshooting.

4.2.3 VACUUM MEASUREMENT

Every module under vacuum is equipped with several Pirani-Penning vacuum gauges allowing measurement of pressures from 10^{-8} mbar to atmospheric pressure.

4.3 DOSE MEASUREMENT

The dose integrator provided is designed by IBS and can measure beam currents from 50 nA to 10 mA. The range of implanted doses can vary from 1E11 atoms/cm² to 1E17 atoms/cm².

4.4 X-Y ELECTROSTATIC SCANNING

IBS has developed an original vectored scanning system. This system, which is fully software managed, can be adjusted depending using specific correction factors up to 45° tilt.
In addition, this scanning system allows lowest non-uniformity levels achievable thanks to its native system of correction factors and energy tracking compensation.

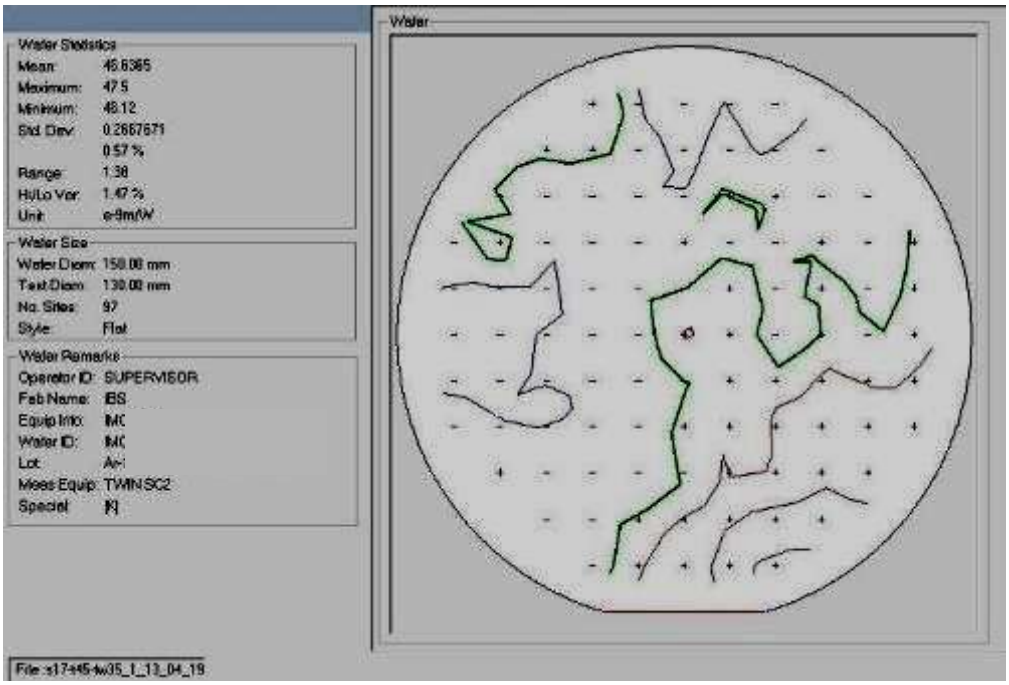

NON-UNIFORMITY at 45° Tilt: 0,6%

The signals generated by the vectored scanning device are amplified by four amplifiers. The deflector plates are manufactured to prevent any metallic contamination due to sputtering induced by the ion beam.

4.5 SYSTEM FACILITIES

4.5.1 DI WATER PRODUCTION SYSTEM

The implanter is equipped with a de-ionized water production device. This equipment has been optimized for an easy maintenance as well as delivering optimal process water characteristics. It is based on a 2 stages design filtration. A resistivity sensor allows monitoring of water resistivity and interlocking the system when defined by user.

4.5.2 FLUIDS

All the modules are fitted with state-of-the-art valves and monitoring devices adapted for 'lock-out/tag-out' safety operations.

4.6 ELECTRONICS – ELECTRICAL

The equipment's power and electronics control is designed to be as simple and efficient as possible in terms of usability, maintenance operations and cost effectiveness.
To reach this goal, both circuitries have been designed using state of the art elements from major equipment providers (Schneider for electricity and command control). This allows an availability of spare parts through standard dealers all over the world guarantied for more than 10 years, avoiding any dependency on IBS for spare parts supply.
Furthermore, we have designed our command & control circuitry with as many identical boards as possible. The main advantage of this approach is that only the minimum different boards are required as spare parts to fix any malfunctioning sub assembly control module.

4.7 MONITORING ELECTRONICS

Scanning error detection and dose control are operated through specifically IBS developed electronics equipment interfaced to the equipment's control software. All the operations are performed and monitored through the equipment's software & user interface.

4.8 CE MARKING

The equipment delivered is certified compliant with CE regulations, and is CE marked.
The system is tagged with a legal identification plate, and is delivered with its CE compliance certificate and all the required technical compliances for this type of system.

5. SOFTWARE

IBS has developed dedicated modular software to operate this implanter. This software is universal and adapted to match customer tool configuration.
This software provides a user-friendly interface (under Microsoft™ Windows operating system), which will be displayed in English language. All the displays and functionalities can be customized to match customer's requests.
The software provides operations at different levels, from fully automatic actions (where pressing a simple button on the touch screen runs a pre-programmed routine) to full manual control (where every single parameter, system constant of the implanter or action can be modified without limitation or restriction). Those different modes can be password protected.
This software can be upgraded according to any new need expressed by customer, and can be uploaded from our facilities to the implanter via modem without actual intervention on the equipment (if this option has been selected by the customer).
ATTENTION: software license is non-transferable

5.1 OPERATIONS

The software monitors and controls all aspects of the implanter:

- Hardware modules
- Safety
- Process & recipes
- Access levels
- Failure or error management
  - Process recovery
  - Help for diagnosis
- Maintenance routines

5.2 SAFETY MANAGEMENT

Management of electrical interlocks and gas delivery interlocks (in addition to hardware interlocks).
Set up of various access levels with password in order to limit possible actions on tool, such as "Operator", "Service", "Manager".

5.3 DATA LOGGING

The system will be delivered with standard datalogging / data tracking capability. This includes wafer implant summary log and system event log.

5.4 SCREEN EXAMPLES

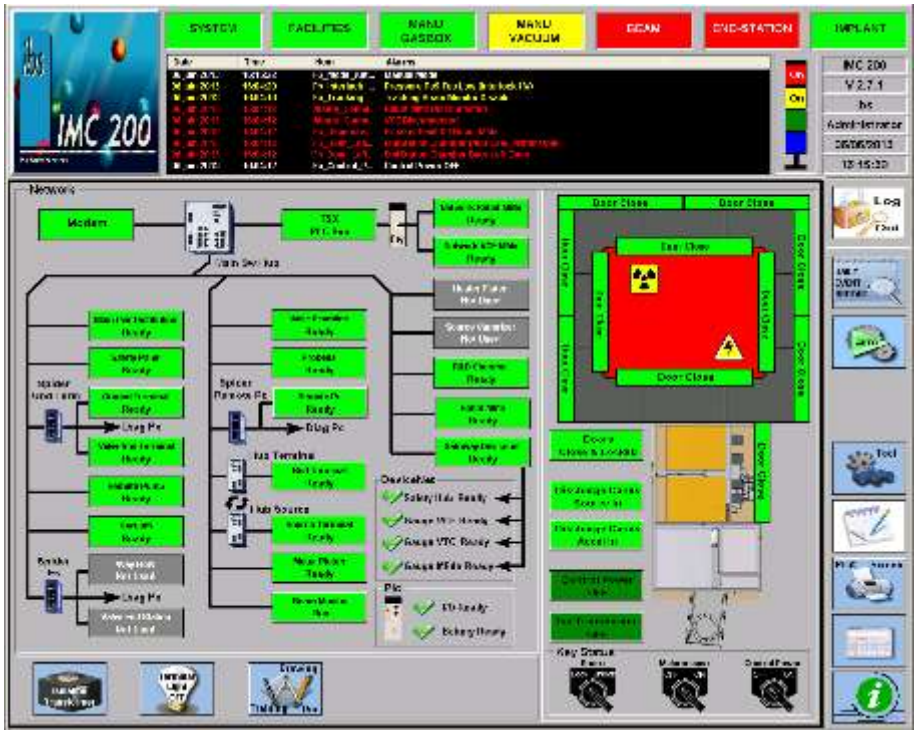

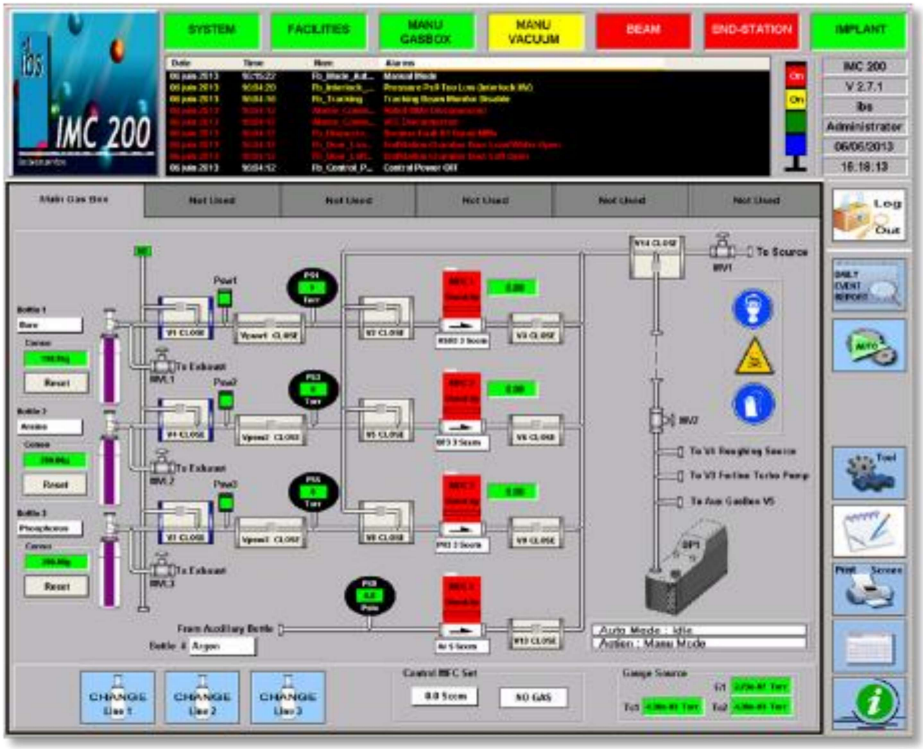

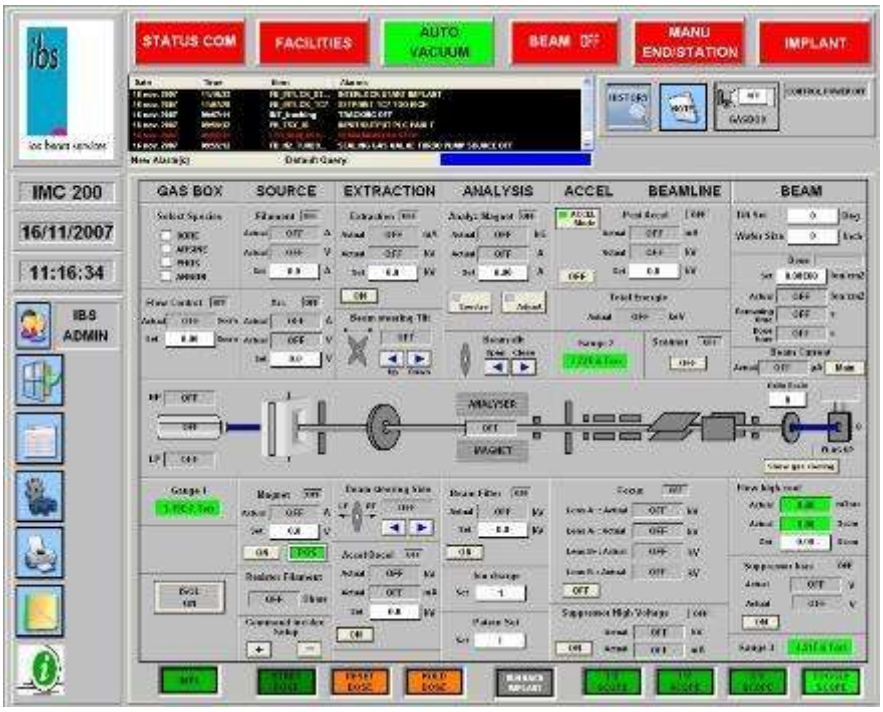

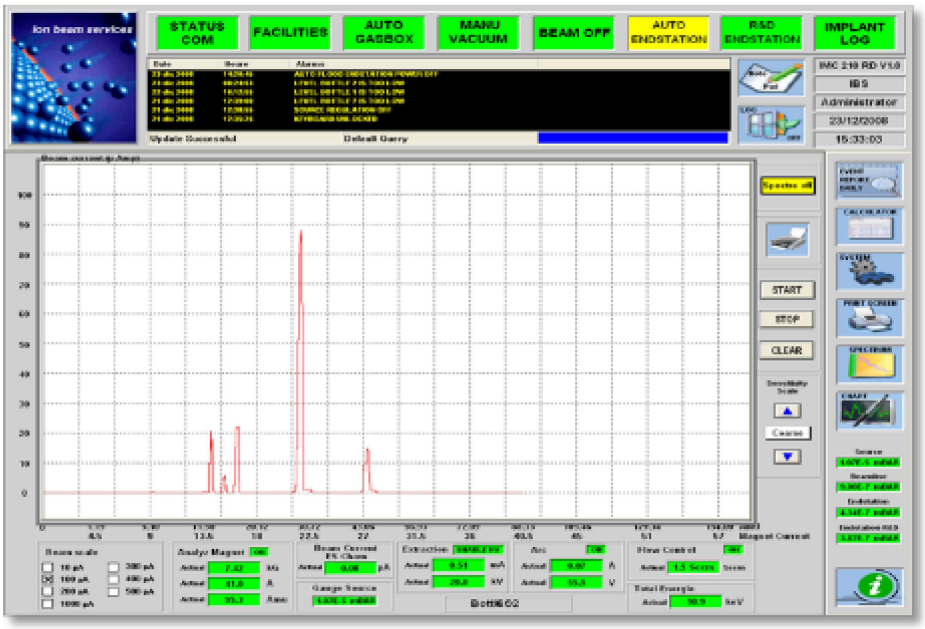

Optional mass spectrum software

6. OPTIONS

6.1 SPECIES DELIVERY

6.1.1 AUXILIARY GAS BOX

The auxiliary gas box gives access up to 4 *inert* gases (Ar, He …) stored in high pressure cylinders.

6.1.2 VAPORIZERS

An ion source can be fitted with a room temperature or a high temperature vaporizer High temperature vaporizer gives stability and small thermal inertia for operation temperatures up to 850°C.
It can implant species from solid state precursors, such as P, As, Sb, Er, Bi, Cr, Ni, Fe, etc.

6.1.3 IBS DEVELOPED RECIPES TRANSFER

IBS has set-up dedicated recipes for various refractory or noble species such as gold allowing implantation without the use of sputtering source. Those recipes can be the object of a technology transfer between IBS and its customer.

6.2 ENERGY

6.2.1 3 KV DECEL MODE

This option provides the possibility to automatically switch to decel mode and implant in the range of 29 kV to 3 kV without having to modify the extraction voltage setting.
It provides a much better uniformity in low energy ranges than the reduction of extraction voltage.

6.2.2 MULTI CHARGE IMPLANT

The beam filter is fitted at the exit of the magnet to ease the selection of double charged species and prevent single charge contamination.

It is based on the principle of electrostatic mirror which permits the removal of unwanted ions generated by dissociated molecules between the ion source and the analyzer magnet.

6.3 SOFTWARE

6.3.1 MASS SPECTRUM

The mass spectrum for any specie selection can be displayed and monitored through a dedicated window of the software and the possibility of printing the results is offered to user.

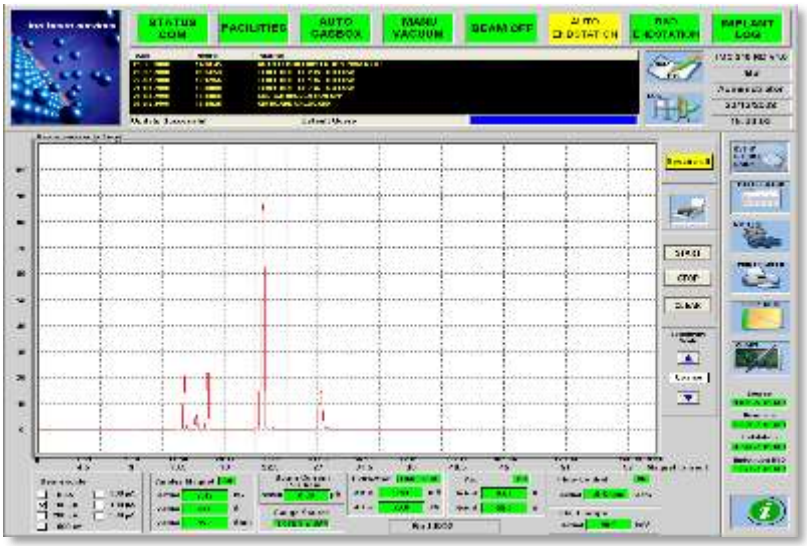

6.3.2 ADVANCED DATALOGGING

The option provides access to and recording of every parameter of the system for charts edition and extended data analysis.

6.4 WAFER HANDLING

6.4.1 CRYOCOOLER PLATEN

- The cryocooler option provides a temperature of -100°C on the platen. The platen is only mechanically clamped (not available with electrostatic clamping).

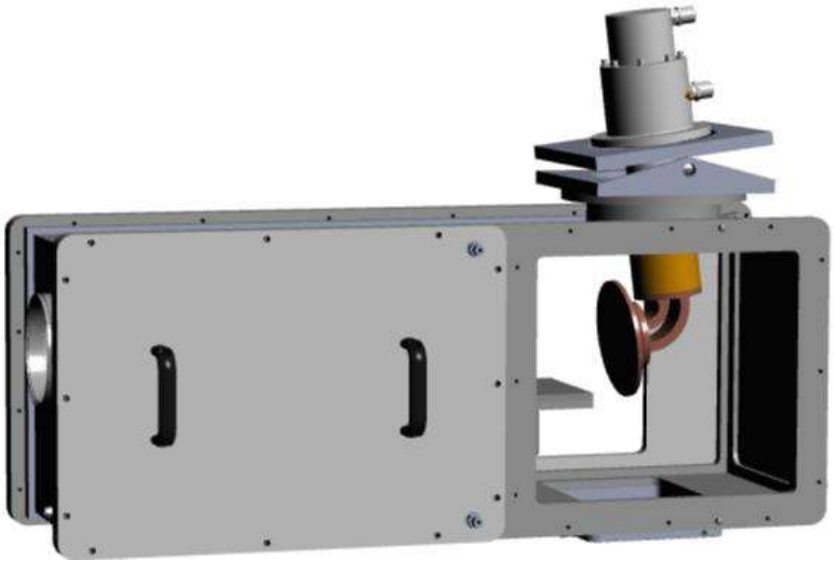

- The cooling with such a platen is efficient only with 1 wafer size
- It is possible to use holder to implant smaller wafers or samples, however the cooling of the wafer will be not efficient through the interface of a holder. to purchase a specific platen for each desired wafer size.
- Fixed tilt (0° to 7°)
- Single wafer size: 4” or 6”
- No adjustable twist
- Temperature measured with a TC with regulation
- Heating to speed up venting

6.4.2 SINGLE WAFER HOT IMPLANTATION

- Heating platen characteristics:
  - Up to 650°C on the platen heated by halogen on graphite plate and up to 800°C if heating limited to few cm² samples
  - Up to 700°C in option
  - Versatile from 10x10mm samples (with an optional graphite holder) to multiple wafer size (2”, 3”, 4”, 5”, 6”) thanks to adjustment of hard-stops and knobs.
  - Temperature non-uniformity: 1σ ≤ 5 % at 600°C on 6” wafer
  - From room temperature to 600°C in less than 45 minutes
  - In option 700°C achievable on the platen
  - From 600°C to 100°C in less than 45 minutes

- Very low temperature overshoot (less than 5% during ramp-up)
- Grounded platen with independent dose measurement to avoid any parasitic current due to heat radiation
- Tilt 0° to 14°; no twist possible
- The temperature of the carousel is measured by 3 TC in the graphite used for regulation and over temperature protection, and in option by a pyrometer which measure the actual wafer temperature.

6.5 MAINTENANCE

IBS can typically:

- extent the guarantee
- provides a hotline service (it requires the ethernet connection option; depending on the problem; it will address only remotely doable diagnostics & remotely doable light troubleshooting)
- ensure preventive or corrective maintenance via yearly contracts.
- supply kits of consumables

Please contact us for details.

6.6 SPARE PARTS KIT

A yearly consumables kit can be ordered. This spare parts kit is based on 6 hours running per day, on a 5 days and 45 weeks basis. This kit can be recalculated according to customer specifications.